WAVES/ABBEY ROAD

EMI TG12345

USER GUIDE



WAVES

Abbey Road Studios

TABLE OF CONTENTS

CHAPTER 1 – INTRODUCTION 3

1.1 Welcome **3**

1.2 The Original EMI TG12345 Console **3**

1.3 The EMI TG12345 Plugin **4**

1.4 Concepts and Terminology **5**

1.5 Components **7**

CHAPTER 2 – INTERFACE AND CONTROLS 8

2.1 Interface **8**

2.2 Controls **9**

CHAPTER 3 – THE WAVESYSTEM 14

3.1 The WaveSystem Toolbar **14**

3.2 Preset Handling **14**

3.3 Interface Controls **16**

3.4 Waves Preferences (Pro Tools DAE only) **18**

Abbey Road Studios and their associated logos are trademarks of EMI (IP) Limited.

Chapter 1 – Introduction

1.1 Welcome

Thank you for choosing Waves. In order to get the most out of your Waves processor, please take the time to read through this manual.

In conjunction, we also suggest you become familiar with www.wavesupport.net. There you will find an extensive **Answer Base**, the latest **Tech Specs**, detailed **Installation** guides, new **Software Updates**, and current information on **Authorization** and **Registration**.

By signing up at www.wavesupport.net, you will receive personalized information on your registered products, reminders when updates are available, and information on your authorization status.

1.2 The Original EMI TG12345 Console

In 1968, the introduction of 8-track recording and increasing sonic experimentation by the Beatles and other groundbreaking artists meant that the capabilities of Abbey Road Studios' REDD .37 and REDD .51 consoles were being stretched to the max. This called for a new desk.

The year before, EMI had already laid out ideas for a solid-state mixer to replace the valve REDD desks. Throughout 1967, meetings had taken place between the Abbey Road staff and the engineers at EMI Central Research Laboratories in order to design a comprehensive mixing console that would be able to handle the needs of the latest music recordings.

The resulting console, TG12345, was designed to meet the most demanding recording requirements of its time. It was substantially bigger than the old REDD desks, with 24 mic inputs and 8 outputs, 4 echo sends, 2 CUE/foldbacks, and, for the first time ever, a compressor/limiter on every channel, in addition to EQ. The compressor was based on the valve Fairchild and Altec devices used at Abbey Road during the '60s, but ended up with a completely unique sound all its own. The desk was also modular in design, with twelve microphone 'cassettes', or channel strips, that could easily be replaced when faulty. Each cassette contained two input channels that could be used either separately or as a stereo pair.

All in all, the desk had no less than 479 knobs and controls as well as 37 meters. Since it was larger than other consoles (a staggering 79.5" in width), engineers sitting at the center of the desk were unable to reach all the controls.

For several months in the summer and fall of 1968, the new desk was placed in the studios' 'experimental room' for testing. Abbey Road's engineers ran 'clone' sessions to compare TG12345 and REDD, with two sets of mics placed in the room: one going to the REDD .51, the other to the TG. The results were superb: TG12345 proved to have a cleaner, brighter and punchier sound than its predecessor, with unprecedented top end sheen and sparkle.

On the weekend of November 23, 1968, TG12345 MK I was installed in the control room of Abbey Road's Studio Two and connected to the 3M 8-track tape machine. It was first used in a recording session with the Shadows. In mid-1969, the very last Beatles album, *Abbey Road*, was made on the TG12345.

The TG12345 went through several revisions during the 1970s. TG12345 MK II replaced the treble filter with the same presence filter that existed on the main and group cassettes of MK I. The ergonomics of the dynamics section also underwent changes. MK III and MK IV added new utility options, but the sound processors (dynamics and filters) remained unchanged.

1.3 The EMI TG12345 Plugin

The TG12345 plugin is a channel strip with a three-band EQ. Its treble filters deliver a fixed bell filter at 5K for boost, and a fixed shelf filter at 10K for cut. The bass filters are fixed shelf filters at 50 Hz. We have also added a bell filter for presence boost/cut, ranging from 500 Hz to 10 kHz. In the original TG12345 MK I desk, the presence filter was part of the group cassette. We have added it to the TG12345 channel strip for a better user experience.

The TG12345 has a Dynamics section with a limiter/compressor (7:1 and 2:1, respectively) that has a fixed attack time and six options for release time.

The plugin offers three routing options, allowing users to determine where to place the EQ (Bass + Treble), Presence, and Dynamics sections within the signal flow:

- **EQ>>Dyn>>Pres** – EQ first, then Dynamics, then Presence.
- **Dyn>>EQ>>Pres** – Dynamics first, then EQ, then Presence.
- **EQ>>Pres>>Dyn** – EQ first, then Presence, then Dynamics.

The default setting is EQ>>Pres>>Dyn. Together, these three options run the gamut of the routing options offered by the different versions (MK I-IV) of the original TG12345 desk.

The TG12345 has a unique spread control, which is an MS matrix-type process. This control can decrease and increase the level of the sides without touching the level of the mid.

Waves has also added several features not in the original console: (1) a high-pass filter on the sidechain that helps preserve low frequencies during compression, (2) a mix control that gives you control over the balance of the compressed and non-compressed signals, just as in parallel compression, (3) drive, (4) noise.

1.4 Concepts and Terminology

VCA

A VCA, or voltage-controlled amplifier, is an amplifier that varies its gain depending on a control voltage, such that the input voltage determines the output voltage. The TG12345 includes a VCA-based compressor. However, whereas most VCA-based compressors only attenuate the signal (voltage in > voltage out), the TG12345's compressor also amplifies it (upwards compression) at very low levels (below 1.5 V).

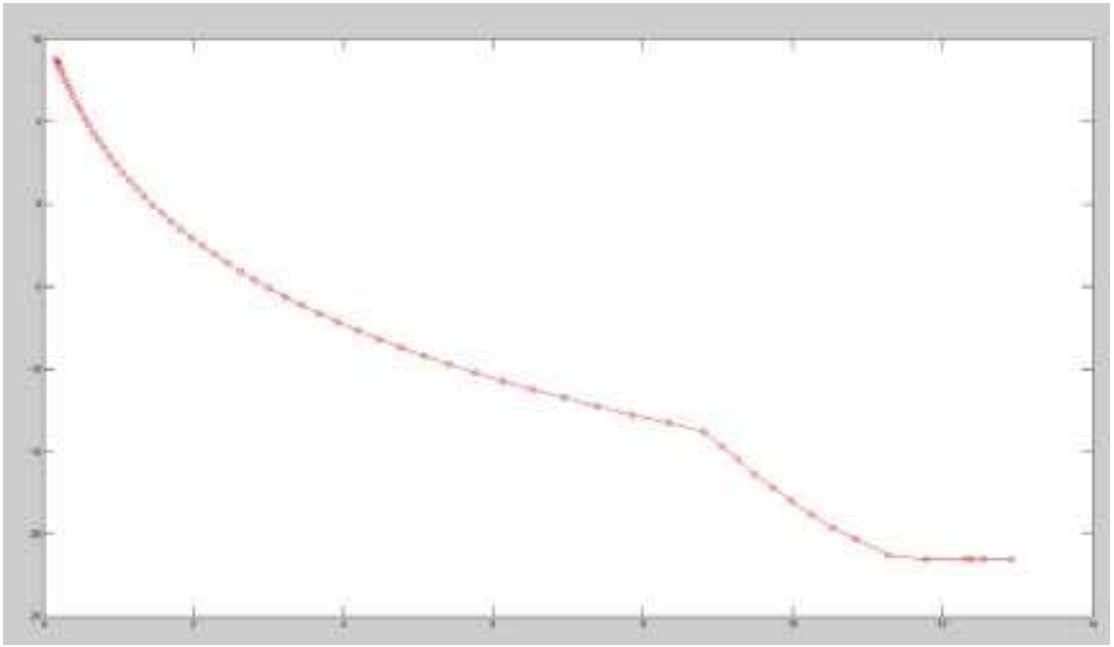

In the graph above, the Y axis represents the amount of amplification or attenuation in dB, while the X axis represents the input to the VCA in volts (0 dBfs = 13.875 V). As the graph shows, signals below 1.5 V are boosted while signals above 1.5 V are attenuated. The VCA input is triggered by the feedback signal through the sidechain.

Feedback Compression

The signal entering the compressor is sent to the VCA. The output of the VCA is then split: one copy goes to the output, while the other is fed back to the VCA via a sidechain circuit. See the image below:

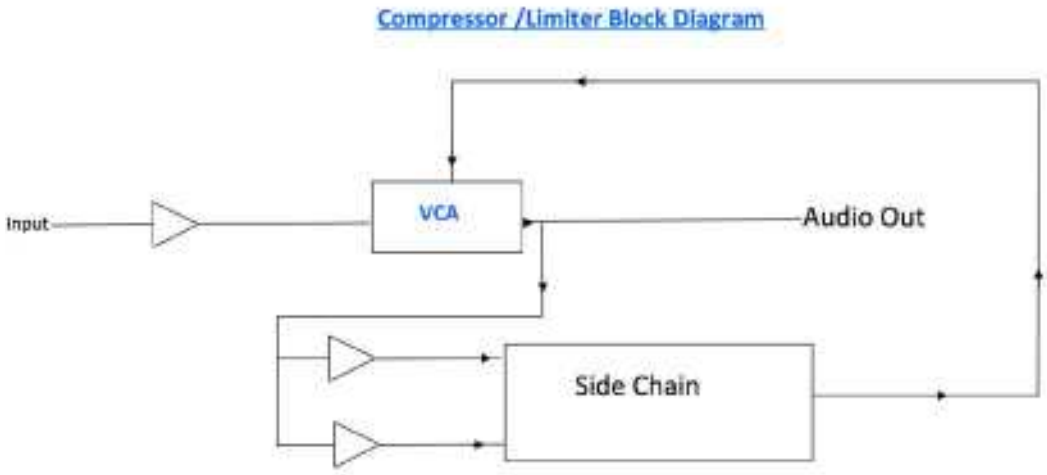

Sidechain High Pass (SC-HP)

As explained in the Feedback Compression section above, the input signal is fed to back to the VCA. Generally, the more energy you have in the sidechain, the more compression you get; but if you apply a high-pass filter to remove low energy from the signal, the result is less energy when low-frequency energy is present, hence less compression. In the case of a bass guitar, for example, the abundance of low energy entails lots of compression; but if a high-pass filter is applied on the sidechain, the VCA will identify less energy on the low bass notes than there is in the actual input signal and will therefore attenuate the signal less, allowing more low frequency.

Sidechain Voltage

The sidechain section of the TG12345 converts the signal from AC to DC, with the VCA controlled via the DC current. The higher the DC current, the more compression you get. The sidechain voltage can range from a couple of mV to 15 V. The amount of compression for each volt is represented in the VCA graph above.

TG12345 Cassettes

The original TG12345 desk included three main sections, or three types of "cassettes" (technically there were six types of cassettes, but only three were significant sound-wise; the other three were utility cassettes):

1. **Microphone Cassette:** This section had the mic preamp, an EQ (treble + bass) section, a dynamics section, sends + returns, a spread, a pan pot, and faders. Each cassette was actually a stereo channel, with the option of summing the signal to mono. In TG12345 MK II, the treble EQ was replaced with a presence EQ and the spreader was removed.
2. **Group Cassette:** There were two group cassettes, each containing two subgroups. Any of the microphone cassettes could be routed to a group cassette, and multiple channels routed from the mic cassette to the group cassette could be controlled through the group channel. The group cassette had another dynamics section as well as a presence control (in the TG12345 MK II, this presence control replaced the treble EQ).
3. **Main Cassette:** The TG12345 had five main cassettes: four feeding the tape machine (each was a stereo cassette, for a total of eight tracks), and one for the aux stereo outputs. Each main cassette had another presence EQ section to adjust the final output to the tape.

If you review the routing on the TG12345 plugin, you will see that you can achieve any signal flow within the console using two instances of the plugin. A signal flow simulating a mic-cassette-to-group-cassette flow on the TG12345 MK I can be achieved using just one instance (EQ>Dyn>Pres).

1.5 Components

WaveShell technology enables us to split Waves processors into smaller plugins, which we call **components**. Having a choice of components for a particular processor gives you the flexibility to choose the configuration best suited to your material. **TG12345** includes the following components:

- TG12345 Mono
- TG12345 Stereo

Chapter 2 – Interface and Controls

2.1 Interface

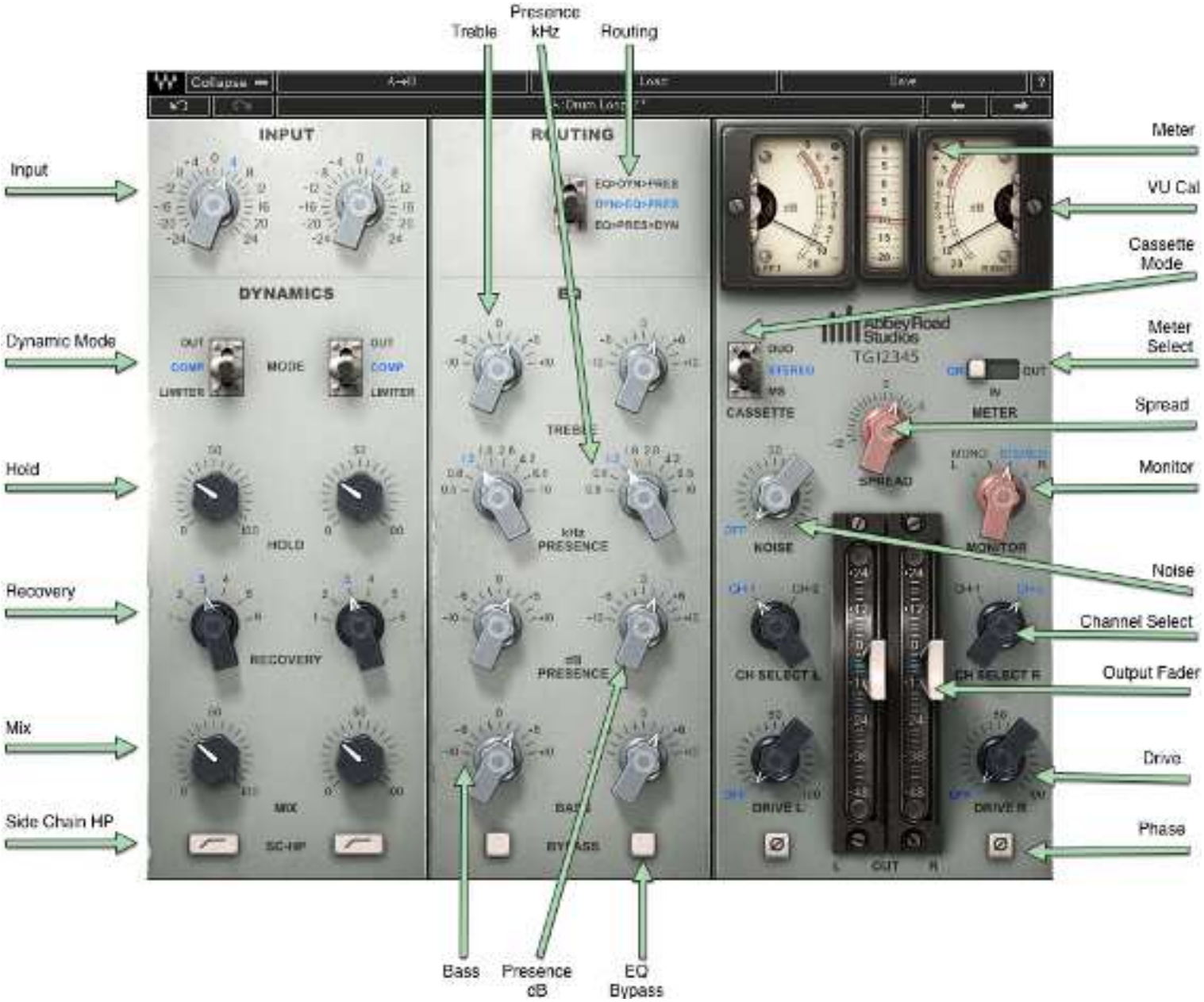

2.2 Controls

Input

Increases or decreases the gain of the signal.

Range: -24 dB to 24 dB

Default: 0 dB

Routing

Allows you to order the signal flow — EQ (Treble + Bass), Presence, Dynamics — in one of three ways:

- **EQ>Dyn>Pres** – EQ first, then Dynamics, then Presence
- **Dyn>EQ>Pres** – Dynamics first, then EQ, then Presence
- **EQ>Pres>Dyn** – EQ first, then Presence, then Dynamics

Default: EQ>Pres>Dyn

Dynamics

Mode

Allows you to choose between three dynamic modes:

- **Out** – In this mode, the Dynamics section is bypassed.
- **Compressor** – Compressor mode (2:1), with attack fixed to 1 ms.
- **Limiter** – Limiter mode (7:1) with attack fixed to 1 ms.

Default: Out

Hold

Sets a constant DC voltage for the sidechain that feeds the VCA (for more information on VCA, see the Concepts and Terminology section on p. 5 above). This constant voltage causes a fixed amount of attenuation throughout the signal. When the input voltage that reaches the sidechain is greater than the voltage set by the Hold control, the plugin's simulated diode is breached and VCA is triggered by a changing DC voltage, causing the gain change to vary according to the VCA characteristics. When the input voltage is lower than the voltage set by the Hold control, the amount of attenuation is once again constant. This control is the only way for you to narrow the VCA's gain change range.

The way to use the Hold control is this: set the meter to GR, change the Hold level until you get the overall amount of compression you want, then make up for the gain loss using the

output faders. Many compressors operate by linking the hold control to the output faders (the threshold), but the TG12345 is unique in keeping them separate.

Range: 0–100

Default: 0

Recovery

Sets the release time, with six states for each dynamic mode.

Range: 100 ms, 250 ms, 500 ms, 1 sec, 2 sec, 5 sec.

Default: 100ms

SC-HP

Applies a high-pass filter on the sidechain signal at around 90 Hz, resulting in less compression on the low end.

Range: On, Off

Default: Off

Mix

Controls the balance between the compressed and uncompressed signal.

Range: 0% to 100% (0.1% increments)

Default: 100%

EQ

Treble

Boost: Bell filter fixed at 5 kHz

Cut: Shelf fixed at 10 kHz

Range: -10 dB to 10 dB

Default: 0 dB

Presence (kHz)

Bell filter controls the center frequency of the presence filter.

Range: 500 Hz to 10 kHz (continuous)

Default: 1.8 kHz

Presence (dB)

Boosts/cuts the presence filter.

Range: -10 dB to 10 dB

Default: 0 dB

Bass

Low shelf filter fixed at 50 Hz.

Range: -10 dB to 10 dB

Default: 0 dB

EQ Bypass

Bypasses the entire EQ section.

Range: On/Off

Default: Off

Master Section

Phase

Inverts the phase of the signal (one per channel).

Range: On/Off

Default: Off

Channel Selector

Two channels of the original TG12345 desk have been modeled: Channels 1 and 2.

- Mono: Select Channel 1 or 2
- Stereo: Select Channel 1 or 2 for L, R, or both
- L default: Channel 1
- R default: Channel 2

Note: To keep your stereo image as close as possible to your input, select the same channel for both L and R.

Drive

Controls the amount of drive added to the processed signal.

Range: Off to 100

Default: Off

Noise

Controls the amount of noise and hum added to the processed signal.

Range: Off to 100

Default: Off

Spread (Stereo Component Only)

Controls the balance between the mid and sides by changing the level of the sides only, while the level of the mid remains constant. This feature is available in all cassette modes, not just in MS. The spread is very similar to an MS matrix; it is faithful to the plugin's analog origins, however, in that the encoding and decoding of the matrix do not cancel each other perfectly, giving the spread its distinctive vintage character.

Range: -12 dB to 6 dB (0.1 dB increments)

Default: 0

Monitor (Stereo Component Only)

Selects the source of the monitor output.

- **Left** – Left output is sent to both sides (in MS Mode this monitors the mid)
- **Mono** – Left and Right outputs are summed to mono and trimmed down by 6 dB
- **Stereo** – Stereo mode
- **Right** - Right output is sent to both sides (in MS Mode, this monitors the sides)

Default: Stereo

Output

Two faders (one per channel) that control output gain after processing.

Range: -48 dB to 24 dB

Default: 0 dB

Metering

VU Meter

Displays input, output and gain reduction levels, depending on your selection.

Range IN/OUT: -20 VU to 3 VU

Range GR: -20 VU to 9 VU

Peak Meter

Displays signal peak output level.

Range IN/OUT: -20 dBfs to 0 dBfs

Range GR: -20 dBfs to 9 dBfs

VU Meter – Headroom Calibration Control

The meter's headroom calibration default is set to 18 dB headroom. The meter can be adjusted using the little screw underneath to provide a headroom of 8 to 24 dB (or -8 to -24 dB), where X dBfs = 0 VU.

Range: 8 dB to 24 dB / -8 dB to -24 dB

Default: 18 dB

Meter I/O

The meter I/O lets you select from three monitoring modes:

GR: Shows the total amount of gain reduction/increase.

IN: Shows the input signal level post-input control, so that any change in the input is reflected in the meter.

OUT: Shows the output level of the plugin post-output control, so that any change in the output is reflected in the meter.

Please note: Some constant amplification factors are not reflected in the GR meter because they are fixed and not signal-dependent. This is why what you see on the GR meter will not necessarily reflect what you are hearing.

Range: GR / IN / OUT

Default: IN

Clip Indicator

Indicates peak clipping.

Chapter 3 – The WaveSystem

3.1 The WaveSystem Toolbar

All Waves plugins feature the WaveSystem toolbar, which takes care of most of the administrative functions you will encounter while working with your Waves software. The features of the WaveSystem toolbar are the same on practically all Waves plugins, so familiarity with its features will be helpful whichever plugin you are using.

Toolbar Functions

	Opens the plugin About box
Undo	Undoes the last 32 actions
Redo	Redoes the last 32 undone actions
Setup A/B	Toggles between two presets, useful for comparison of parameter settings
L/R Arrows	Move to the previous or next preset
Copy A→B	Copies the current settings to the second preset register
Load	Recalls presets from file
Save	Saves presets in the Waves file formats
?	Opens the PDF manual for the plugin you are using

3.2 Preset Handling

Preset Types

Factory Presets are permanent presets in the Load menu. Factory presets cannot be overwritten or deleted. When applicable, different component plugins may have different factory presets.

User Presets are your favorite settings of the plugin saved as a preset in the Load menu, under 'User Presets'. User Presets can be overwritten and deleted.

Setup Files may contain more than one preset. For example, a single file can contain all the presets for a session. When you open a Setup File, all its setups become part of your Load pop-up menu for fast access. This can be particularly useful with multiple instances of a plugin in a single session. By saving all the settings you create into a single Setup File, they can all be quickly available for every instance of that plugin.

Loading Presets and Setups



Click on the Load button to see the Load pop-up menu. The menu is divided into four sections. If a section is not currently available it will not appear in the Load pop-up menu.

Open Preset File… Select to open any setup or preset file, whether from the Library or your own creations.

'Filename.xps': Displays any currently loaded Setup File and its presets.

Factory Presets: Displays the default Factory Presets.

User Presets: Displays any loaded User Presets.

Saving Presets and Setups



Click on the Save button to see the Save pop-up menu. Four options are available. If an option is not currently available it will be grayed out and inaccessible.

Save to New File… Select this to start a new Setup file. There are two prompts - first for the setup filename, then for the preset name. You must provide a name for both the setup file and the preset. Click OK (ENTER) to complete the save. It is a good idea to create a folder in which to save several setup files for a project.

Save 'File Name' – "Preset Name" Overwrites the settings of the loaded preset (whether a User Preset or a preset from a Setup File) with the current settings. If a Setup File is currently loaded, the name of the Setup File is displayed followed by the name of the preset itself. If a User Preset is loaded, its name is displayed.

Save to 'File Name' As… Saves the current settings as a new preset into the Setup file that is open (if one is not open, the option is grayed out). You will be prompted to give the preset a name.

Put into Preset Menu As… Save the current settings into a User Preset that will always be in your Load menu (until deleted). You will be prompted to give this preset a name. User Presets are stored in the plugin's preference file.

Deleting Presets

You may delete User Presets and presets within a Setup File. Factory Presets and Setup Library files cannot be deleted or overwritten.

1. Hold the Command (Mac)/Control (PC) key down.
2. Click-and-hold the Load button to see the pop-up menu.
3. While still holding the Command/Control key, select the preset or setup to delete.
4. A confirmation box will appear, allowing you to cancel or 'OK' the deletion.

A/B Comparison and Copying



The Setup A/Setup B button may be clicked to compare two settings. If you load a preset in the Setup B position, this will not affect the preset loaded into the Setup A position, and vice-versa.

If you want to slightly modify the settings in Setup A, you can copy them to Setup B by clicking on the Copy to B button, then alter Setup A and compare with the original Setup B.

The name of the current setup will be shown in the title bar (on platforms which support it), and will switch as you change from Setup A to Setup B.

Note: an asterisk will be added to the preset name when a change is made to the preset.

3.3 Interface Controls

Controls can be in one of three states:

1. **Not Selected** where the control is not the target of any user entry
2. **Selected** where the control is the target of mouse control entry only
3. **Selected and Active** where the control is the target for both mouse and keyboard entry

Toggle Buttons

Toggle buttons display the state of a control, and allow switching between two or more states. **Single-click** to change the control's state. Some toggle buttons have a text display which updates

with the current setting, and others (bypass, solo, or monitoring toggles) illuminate when the control is active.

Some plugins have **link buttons** between a pair of toggle buttons, allowing click-and-drag adjustment while retaining the offset between the controls.

Value Window Buttons

Value windows display the value of a control and allow **click-and-drag** adjustment, or **direct control via the keyboard**.

- **Using the mouse**, click-and-drag on the value window to adjust. Some value windows support left/right, some up/down (as you hover over a button, arrows will appear to let you know which direction of movement that button supports). You may also use your mouse-wheel to adjust parameter values.
- **Using the arrow keys**, click once with mouse to select the button, and then use up/down – left/right (depending on the direction supported by that button) to move in the smallest incremental steps across the button's range (holding down the arrow keys will move faster through the range).
- **Using key entry**, double click on the button to open the value window, and directly enter the value from your keyboard. If you enter an out of range number, the button stays selected but remains at the current setting (system beeps if system sounds are on).

Some plugins have **link buttons** between a pair of value windows, allowing click-and-drag adjustment while retaining the offset between the controls.

Sliders

Click or scroll the mouse-wheel on the slider itself or anywhere within the sliders track. The numerical value of the slider settings is displayed in a hover window above the slider path.

Hover Box

Hovering boxes will appear and display the control value when hovering with the mouse over the control.

Multiple Control Selection

One of the most powerful features of the WaveSystem is the ability to select and adjust multiple controls simultaneously. Using the mouse, drag-select the desired group of buttons or graphic controls by clicking and holding at a point outside the controls, and forming a rectangle that includes

the controls you wish to adjust. Alternatively, press and hold Shift while clicking the mouse on any control you wish to link. This method is useful when you want to select two or more controls that are not adjacent to one another.

TAB Functions

TAB moves the 'selected' status to the next control, with shift-TAB moving in the reverse direction. Additionally, the Mac has an option-TAB function for 'down' movement and shift-option-TAB for 'up' movement where applicable. If you have several Value Window Buttons selected, TAB functions will take you through the selected controls only.

Hitting Esc or Return will return the 'focus' to the DAW application.

3.4 Waves Preferences (Pro Tools DAE only)

When launching Pro Tools, hold Shift to view the Waves plugin Preferences window. The following options are available:

- Don't use AudioSuite plugins
- Don't use RTAS plugins
- Rescan all plugins
- HUI control surface support (low resolution)
- Enable single-click text entry