The Dangerous Music Master
Setup and Operation manual

The Dangerous Music mastering transfer console represents the culmination of over 25 years of experience in the design and implementation of custom mastering equipment in many of the world's top mastering studios by the designers at DMI. This experience has been distilled down to a two-rack space unit of exceptional ergonomic and sonic performance. In conjunction with the Dangerous Music **Monitor**, the addition of one's favorite analog processing equipment and A/D/A converters, the Master makes the setup of a world-class analog mastering system easier than it has ever been. This manual explains the features, controls, connections, and suggestions for the operation of this unit.

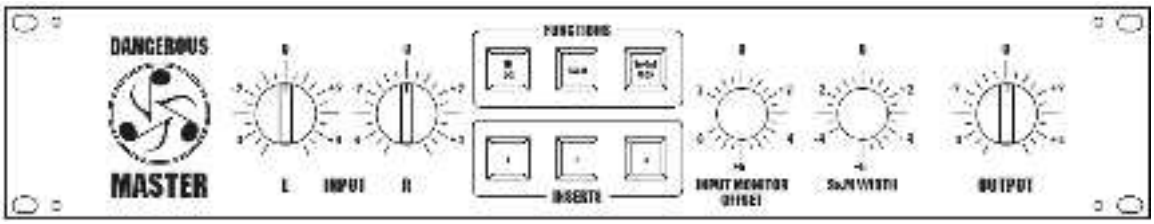

Introduction	1
Safety Review	2
Overview	3
Rear panel connections	4
Front panel controls	5
Internal jumpers	6
Specifications	7

Safety Review



The exclamation point within an equilateral triangle is intended to alert the user to the presence of important operating and maintenance (servicing) instructions in the literature accompanying this product.

Certain precautions should be taken when using electrical products. Please observe the safety hints by reading the manual and obtaining qualified help if necessary to adhere to the precautions. **The power supply must be switched to the proper mains voltage. Please check the red window on the power supply to verify the correct setting for your location before connecting the mains plug.**



1. **Always use a properly grounded power supply cord with this product**. Please do not defeat the ground pin on the mains plug. This connection provides earth to the chassis and signal grounds inside the device for clean and quiet operation. The "Grounding and interface" section can help the user/installer clear up a buzz problem if one develops.



2. **Avoid high temperature operation in equipment racks by providing air circulation**. The number one killer of electronic gear is HEAT. Vented rack panels may look like wasted space to an interior decorator, but they look like *beauty* to a technician or equipment designer! If the front panel is hot, it is roasting inside the box.



3. **Avoid areas of high magnetic fields**. The steel chassis of **Master** is designed to shield the circuits from EMI and RFI (magnetic and radio interference). When installing equipment in racks, it is prudent to put power amplifiers and large power supplies at least several rack spaces, if not in a different rack, away from equipment that deals with low level signals. Separation of high level and low level equipment can pre-empt trouble caused by heat and EMI.



4. **Care should be taken to avoid liquid spills around equipment**. If a spill occurs, please shut off the gear and disconnect the mains. A qualified technician should investigate accidents to prevent further equipment damage or personnel hazards caused by spills.



5. **If one is uncomfortable with opening gear and changing jumpers or making adjustments, please seek qualified help if necessary.**



6. **If adjustments or jumper changes are required, please disconnect the mains plug before opening the top**. Dropped screws or tools on a live circuit board can manifest themselves as burn marks and smoked components. While we feel your pain, (been there) subsequent damage is not covered by the warranty.

Dangerous Music Incorporated reserves the right to change the specifications or modify the designs of its equipment. Sending in the registration card is our way of keeping in touch with users of our equipment should this become necessary. Registration information is always kept confidential and never disclosed to third parties for any reason. Company contact information is on the last page of this manual.

CE

The CE sign on this product signifies the fact that the Master has been tested and verified to conform to the applicable standards of 89/336/EEC. EN55103-1 (emissions) EN61000-2 (immunity) and EN60065:2002 (safety requirements)

Overview

The Dangerous **Master** is easy to set up and use. It is designed to be the platform that turns a few pieces of analog outboard processing gear, a D/A or analog source, and an A/D hooked up to an editing computer, into the backbone of a mastering rig.

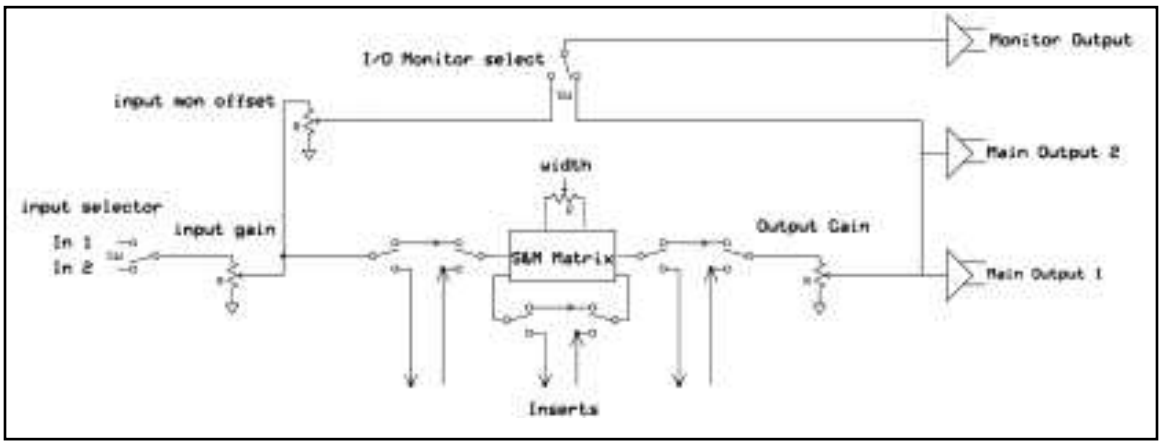

An analog source is fed to the input where the input gain control lets one precisely set the level and balance into the insert stack.

Your favorite analog processing gear is hooked up to the inserts. When an insert button is pressed, that loop is in line. The second loop can work in stereo or "Sum and Minus" mode. In S&M, one can alter the center pan information of a mix without affecting the sides and vice versa. For instance, the lead vocal is too bright but the guitars panned to the sides are dull? The bass in the middle is muddy and the guitars on the sides need some bottom grunt? Use stereo EQ in S&M to fix both problems! A de-esser can fix spitting vocals without killing the air on the drum overheads. A limiter with a fast attack time can tame the snare on an overhead mic pair and let the rest of the kit bloom. These are the tricks of the big time mastering engineers. We know because we built the equipment for them! The Width control allows adjustment of the stereo image width. It works even when Insert 2 is not pressed when S&M is selected. Remember, while S&M is fun, too much can be a bad thing!

The writer's favorite suggested processing goes like this:
Insert 1 gets a stereo EQ to set the tone correct for the rest of the stack.
Insert 2 gets a parametric EQ, De-Esser, and Limiter to fix any problem with a mix.
Insert 3 gets a Compressor to control dynamic range for loudness.

The Output Gain control let's one precisely 'hit' the A/D converter at the correct level.

The Input/Output Monitor Selector lets one compare the dry and processed signal and there is an Input Monitor Offset control so that comparison can be made even after adding several dB of loudness to the mastered signal. This also allows an easy way to tell how much apparent loudness has been added to the signal (by matching the apparent levels and reading the difference on the IMO gain control).

Rear panel connectors

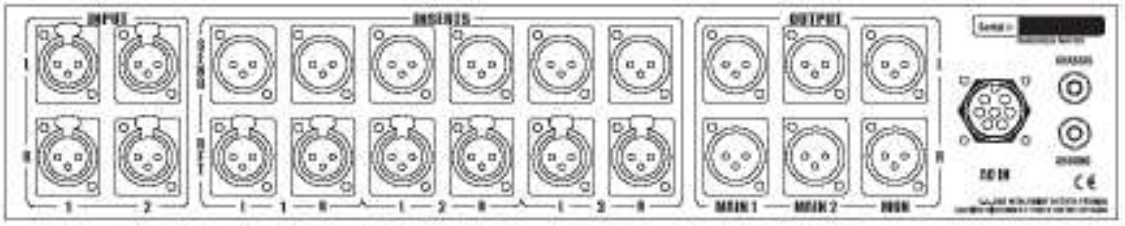

DANGEROUS MASTER REAR PANEL

An analog source is fed to the input connectors. There are two sets, selectable by the 'IN 1-2' switch on the front panel. This makes it easy to have a D/A normaled to the first input and the second input wired to a patchbay or tape machine.

The inserts are to include analog processing equipment. It has been found by the authors after extensive experimentation that 3 insert loops provide the correct number of insert points verses the minimum number of relays to get the job done. More equipment is accommodated by 'ganging' as explained on the previous page. The insert points can be run to a patchbay if the added flexibility of patching is needed (to re-route the order of processing for instance). More connectors and cable may not equal better sound quality.

There are 2 'Main outputs' to feed A/D converters, a tape machine, or patchbay depending on the user's preference. The authors use 2 different A/D converters to select the best one for 'flavor' depending on the program material.

The 'Monitor' output feeds the Dangerous Music **Monitor**. The input signal (post Input level and Input Monitor Offset level controls) or the output signal (post processing) will be sent to the **Monitor** depending on the position of the 'Mon Out' switch on the front panel.

The 'AC IN' connector goes to the power supply. Please check that the supply is off before plugging in this cable. Hot plugging will result in burned contacts.

The 'CHASSIS' and 'GROUND' banana jacks are strapped together at the factory. The strap may be removed to isolate the chassis and audio grounds. The jacks can be used to quiet down a troublesome piece of audio equipment (Sontec) with a ground wire if necessary.

Front Panel controls

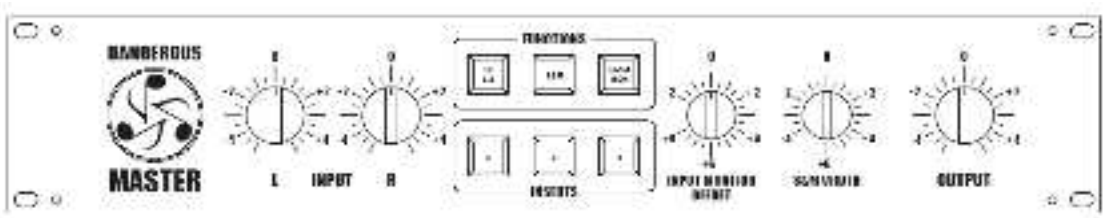

DANGEROUS MASTER FRONT PANEL

The Input Level Controls let the engineer set precisely, the operating level and balance that will go through the equipment selected by the Insert buttons. The range is 10 dB in 0.5 dB steps.

The top row of buttons under 'Functions' select the following:

1. 'IN 1-2' selects which input is processed.
2. 'S&M' selects whether or not Insert 2 is in Stereo or Middle Sides mode.
3. 'OUT MON' selects whether the Monitor Output jacks have the Input or Output signal sent to the monitor section.

The Input Monitor Offset level control adjusts the level of the Input Monitor. This is very handy to match the input and output levels to listen to the effect of processing without the level difference clouding one's judgment. The engineer can also match input and output level, look down at the scale, and determine the relative gain obtained from the mastering process. This control has a scale of -2 to +8dB in 0.5 dB steps.

The S&M width control adjusts the stereo image width when the S&M button is pressed. Please note that activating S&M without 'Insert 2' selected still passes audio through the matrix.

The Output level control lets one set the final level presented to the A/D converter. The range is 10dB in 0.5 dB steps.

The level controls are all stepped attenuators for accuracy, repeatability, and highest sound quality. The attenuators are built with what we feel are the highest quality switches and resistors available at any cost. It is useful to **gently** 'run the switches through' their travel every so often to spread the lubricants around inside and wipe the contacts clean. This helps keep the switches quiet. The use of contact cleaners is not necessary and will damage the switches by washing the grease out.

Internal Jumpers and Adjustments *(please see step 5 on page 2)*

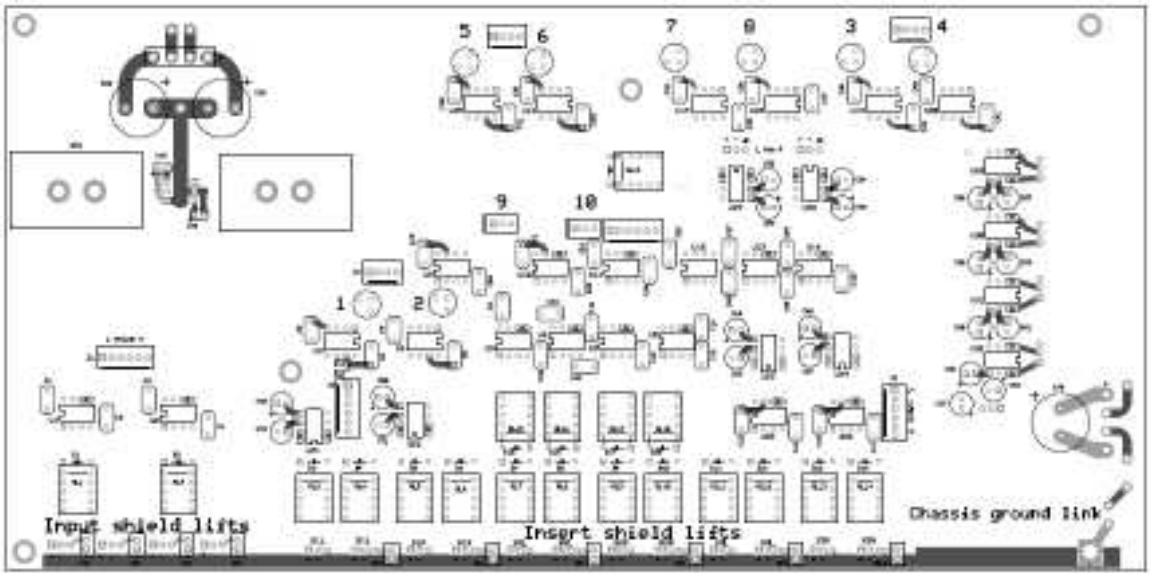

The motherboard has input cable shield ground selection jumpers to accommodate different grounding schemes. It is recommended that all electrical equipment in the studio is properly grounded by making sure that power cables have 3 pins and that the third pin is connected to ground. The use of 'ground lifts' to clear up a buzz problem is frowned upon by the international consortium of electrical safety agencies. If a ground noise problem occurs, it may be cleared up by switching the jumper position on the connector associated with the piece of gear that is having the buzz problem.
The shield lift headers have 2 posts. A jumper placed over both posts connects the chassis ground to the cable shield. To lift a shield, pull the jumper off of the posts. It is a good idea to put the 'unused' jumpers on one of the posts to keep from losing the jumper.

Master should not need to be calibrated but in case it does, here is the procedure:

1. Obtain a calibrated oscillator and level measuring device. These should be lab quality (HP, Tektronix, Neutrik, Audio Precision, etc.)
2. Place the **Master** on a clean, well lit table with a pad under it to prevent scratches.
3. Remove the top to expose the motherboard for calibration.
4. Hook up the power supply and turn on the unit.
5. Set all controls to unity gain with all Function and Insert switches out.
6. Set the oscillator for +4dBu and plug into Input 1. Feed both channels.
7. Activate 'Insert 1' and measure the level coming out of the 'Send 1' jacks.
8. Adjust P1 and P2 to measure +4dBu.
9. Deactivate 'Insert 1' and adjust P3 and P4 to read +4dBu at 'Main Output 1'.
10. Adjust P5 and P6 to measure +4dBu at the 'Monitor Output' jack.
11. Activate the 'OUT MON' function and adjust P7 and P8 to read +4dBu at the Monitor Output jack.
12. Activate the S&M function and adjust P9 for unity gain at Main Output 1.
13. Pull the right channel's input. Adjust P10 for minimum signal at the Right output. The signal should null below -70dBu (-75 typical).

Master Specifications

Measurements made with an Audio Precision P1DD at a nominal operating level of +4dBu

Frequency response	10Hz- 100kHz within 0.1dB	
THD+noise	< 0.0018% band limited to 22kHz	
IMD60 4:1	< 0.0025%	
Crosstalk rejection	> 111 dB	
Headroom	> +27dBu	
Noise Floor	< -92 dB	
Power consumption	40 watts	100-130, 200-250 volts user selectable

Warranty

Free 2 year extended warranty with online registration.
Standard warranty: 90 days parts and labor, subject to inspection.
Does not include damage incurred through abusive operation or modifications/attempted repair by unauthorized technicians.

For Sales and Information:

USA

Dangerous Music, Inc.
231 Stevens Road
Edmeston, NY 13335

Email: info@dangerousmusic.com

Europe

Dangerous Music, Inc.
Stieleichenweg 55
50999 Köln

Tel: +49 2236 393731

E-mail: info@dangerousmusic.de

DANGEROUS MUSIC
www.dangerousmusic.com